COMPONENT SPECIFICATION	USE OR REPRODUCTION OF THIS DRAWING FOR THE PURPOSE OF MANUFACTURING THIS ARTICLE OR ANY ARTICLES SHOWN FOR ANY PURPOSE IS STRICTLY PROHIBITED WITHOUT WRITTEN PERMISSION FROM SENIOR INDUSTRIES, INC.

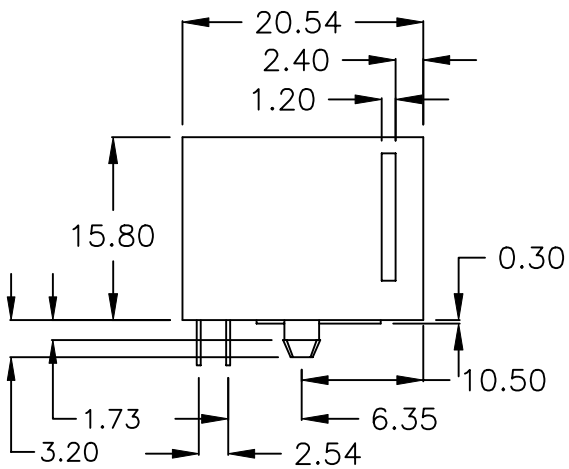

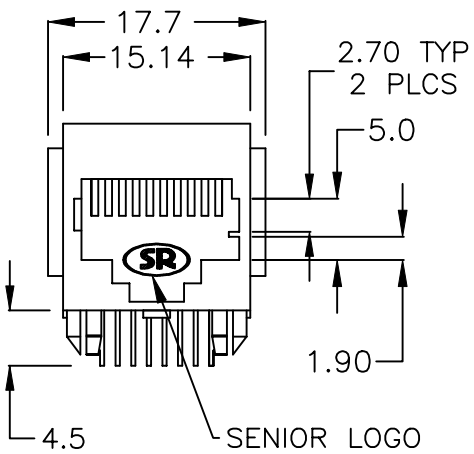

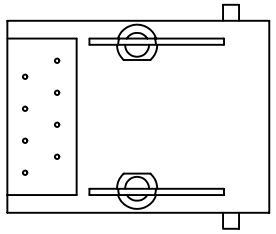

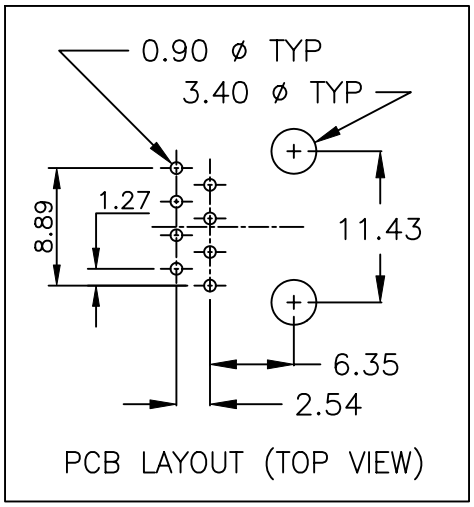

PCB LAYOUT (TOP VIEW)

NOTES:

1. SHORTING PIN 1 TO PIN 4
2. SHORTING PIN 2 TO PIN 5

SPECIFICATIONS

ELECTRICAL:

CONTACT RATING:	1.5A AT 125 VAC
CONTACT RESISTANCE:	30 MILLIOHMS MAX.
INSULATION RESISTANCE:	500 MEGOHMS MIN. AT 500 VDC
DIELECTRIC STRENGTH:	1000 VRMS FOR 1 MINUTE

MECHANICAL:

LIFE:	750 CYCLES MIN.

ENVIRONMENTAL:

OPERATING TEMPERATURE:	0°C TO 70°C
STORAGE TEMPERATURE:	−40°C TO +85°C

MATERIAL:

HOUSING:	GLASS FILLED POLYESTER, UL94V−0
TERMINALS:	PHOSPHOR BRONZE, 0.35t
PLATING: CONTACT AREA −	SELECTIVE GOLD PLATING OVER NICKEL OVER TIN
TERMINATION AREA −	100 µIN. TIN OVER NICKEL

PART NUMBER BUILDER:

MODEL: 9639S — KEYWAY — CONTACTS — PLATING — COLOR

KEYWAY:
- BLANK
- "K" (WITH KEY)

CONTACTS:
- 0 = 8 CONTACTS
- 1 = 6 CONTACTS

PLATING:
1. 15 µIN. Au
2. 30 µIN. Au
3. 50 µIN. Au
4. 6 µIN. Au
5. 3 µIN. Au

COLOR:
1. BLUE
2. RED
3. BLACK (STD)
4. BROWN
5. GREEN
6. WHITE
7. GRAY
8. ORANGE
9. YELLOW
10. VIOLET
11. IVORY/NEUTRAL

SENIOR INDUSTRIES, INC.

DESIGNED:		
DRAWN:	RB	03/04/99
CHECKED:	GAT	05/21/08
APPROVED:	JF	05/21/08

SYM.	DATE:	DESCRIPTION OF REVISIONS:	DRAWN:	APPD:
1	04.17.00	Updated specifications	RB	JF
2	09.28.00	Changed PN from 9639SK−XX−X to 9639−XX−X	RB	JF
3	11.09.00	Reversed Rev. C change. PN is 9639SK−XX−X	RB	JF
4	08.12.05	New Index, PN Bldr Corr'd, 'K'remv'd from PN	KO	JF
5	05.21.08	8 & 6 positions only	GAT	JF

TOLERANCE:
- TO 1 DECIMAL PLACE: ±.3
- TO 2 DECIMAL PLACES: ±.12
- AS ANGLES: ±1/2°

PART NO:	9639S−XX−X
TITLE:	MODULAR JACK
SHEET:	1 OF 1

3RD ANGLE | UNIT: mm | SCALE: 2:1 | REV: F