COMPONENT SPECIFICATION	USE OR REPRODUCTION OF THIS DRAWING FOR THE PURPOSE OF MANUFACTURING THIS ARTICLE OR ANY ARTICLES SHOWN FOR ANY PURPOSE IS STRICTLY PROHIBITED WITHOUT WRITTEN PERMISSION FROM SENIOR INDUSTRIES, INC.

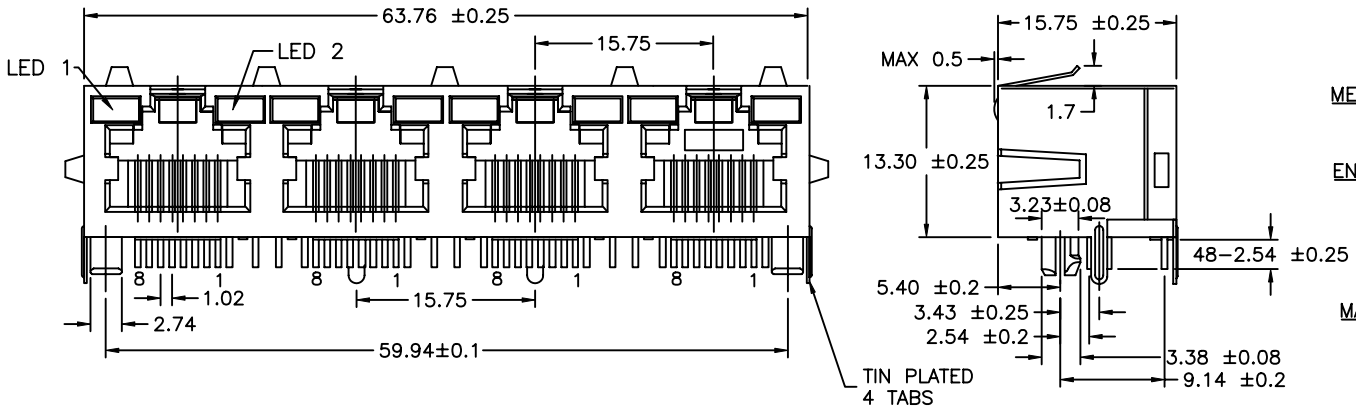

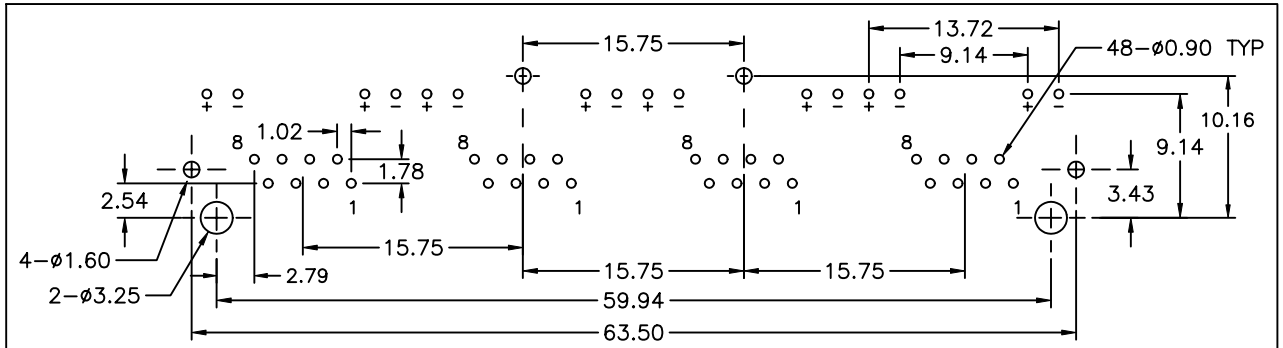

P.C.B. LAYOUT
COMPONENT SIDE

SPECIFICATIONS

ELECTRICAL:

CONTACT RATING:	1.5A AT 125 VAC
CONTACT RESISTANCE:	30 MILLIOHMS MAX.
INSULATION RESISTANCE:	1000 MEGOHMS MIN. AT 500 VDC
DIELECTRIC STRENGTH:	1000 VRMS FOR 1 MINUTE
LED RATINGS:	FORWARD VOLTAGE: 2.2 VOLTS TYPICAL REVERSE VOLTAGE: 5 VOLTS MINIMUM

MECHANICAL:

LIFE:	750 CYCLES MIN.

ENVIRONMENTAL:

OPERATING TEMPERATURE:	0°C TO 70°C
STORAGE TEMPERATURE:	−40°C TO +85°C

CAVITY CONFORMS TO FCC RULES AND REGULATIONS PART 68, SUBPART F.

MATERIAL:

HOUSING:	NYLON−46, HEAT DEFLECTION TEMP. 290° BLACK COLOR, UL94V−0
INSERT:	GLASS FILLED POLYESTER, UL94V−0
LENS:	PC, UL94V−0, CLEAR
SHIELD:	0.25mm THICK COPPER ALLOY, NICKEL PLATED
TERMINALS:	0.35mm THICK PHOSPHOR BRONZE
PLATING:	CONTACT AREA − SELECTIVE GOLD PLATING OVER NICKEL TERMINATION AREA − GOLD FLASH PLATING

PART NUMBER BUILDER:

MODEL — CONTACTS — PLATING — LED COLOR

9671R — [ ] — [ ] — [ ]

CONTACTS:
- 0 = 8 CONTACTS
- 1 = 6 CONTACTS
- 2 = 4 CONTACTS

PLATING:
1. 15 µIN. Au
2. 30 µIN. Au
3. 50 µIN. Au
4. 6 µIN. Au
5. 3 µIN. Au

LED COLOR:
- BLANK − NO LED
- 1 − LED1 = GREEN, LED2 = YELLOW
- 2 − LED1 = GREEN, LED2 = GREEN
- 3 − LED1 = YELLOW, LED2 = GREEN

SENIOR INDUSTRIES, INC.

			SYM.	DATE:	DESCRIPTION OF REVISIONS:	DRAWN:	APPD:
DESIGNED:			A	05.04.01	NEW	RB	JF
DRAWN:	RB	05/04/01	B	08.15.05	New Index, PN Builder Corrected	KO	JF
CHECKED:	GAT	01/29/07	C	01.29.07	General spec updated	GAT	JF
APPROVED:	JF	01/29/07	D	. .			
			E	. .			

TOLERANCE:
- TO 1 DECIMAL PLACE: ±.25
- TO 2 DECIMAL PLACES: ±.13
- AS ANGLES: ±1/2°

PART NO:	9671R−XX−X
TITLE:	MODULAR JACK
SHEET:	1 OF 1

3RD ANGLE	UNIT:	mm	SCALE:	2:1	REV:	C